Spirit Flag

(Small) 835x500mm

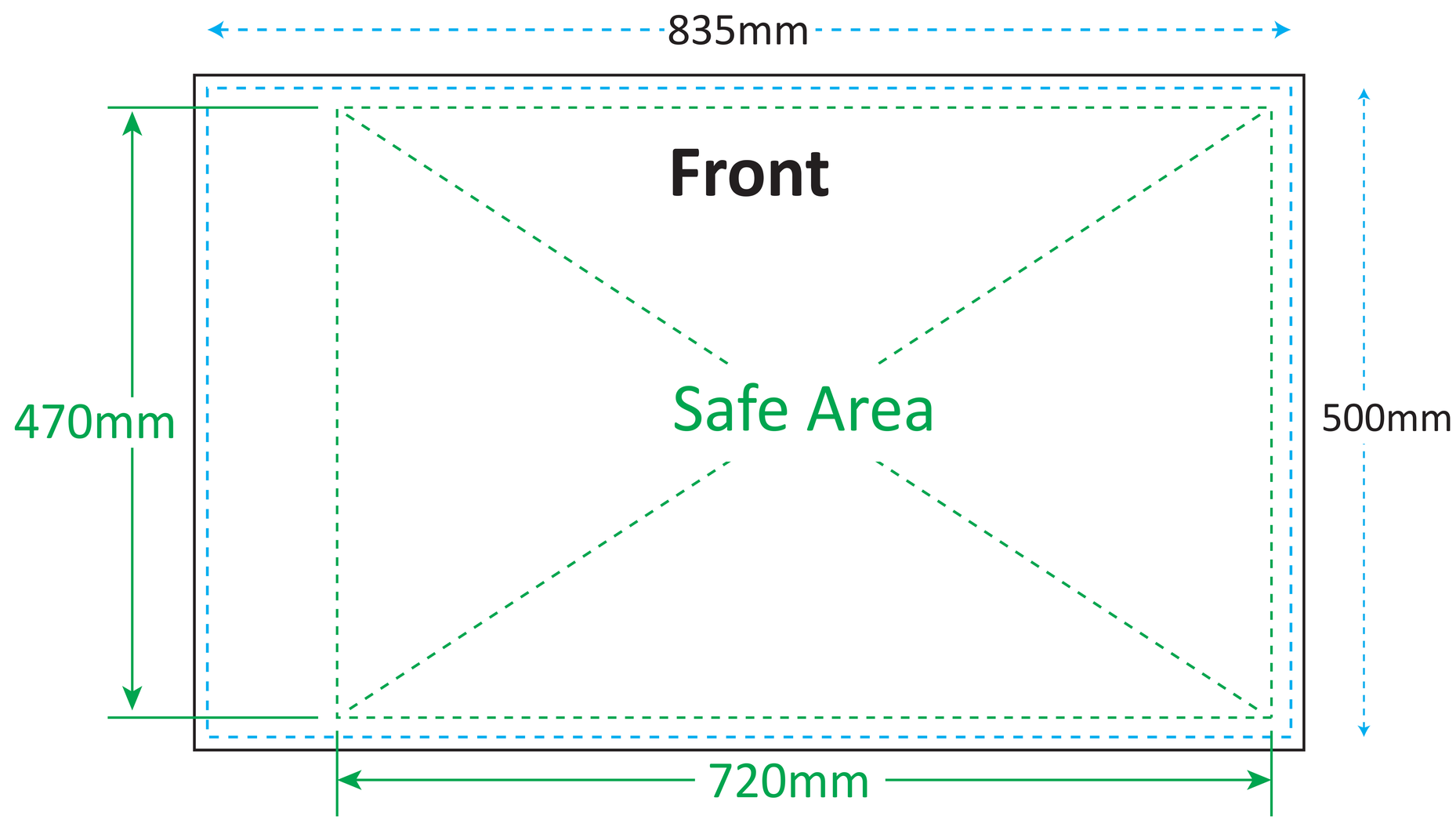

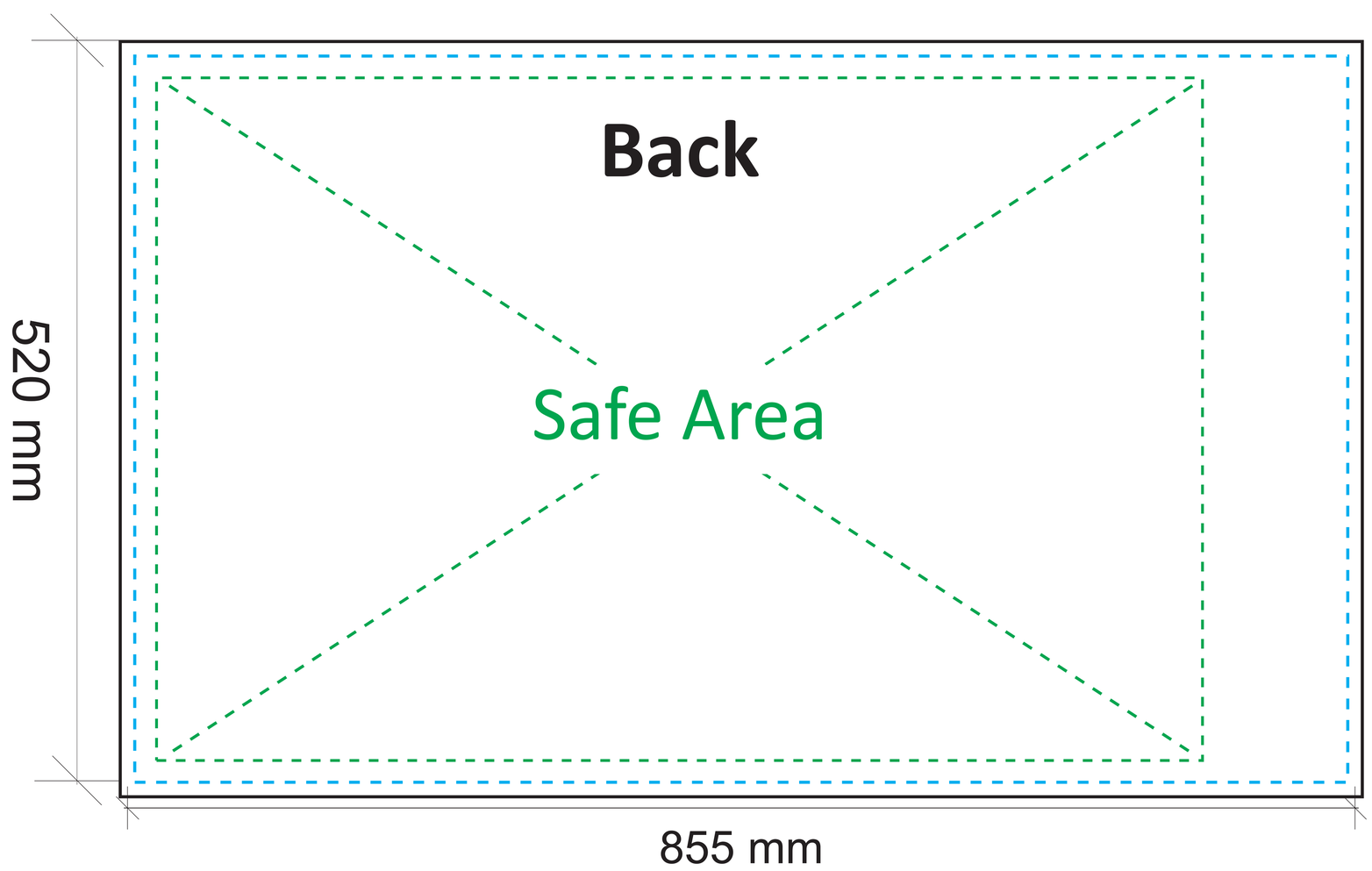

Safe Area

Actual Size

Print Area

Unit : Millimetres (mm)

ARTWORK GUIDELINES

Color Format : CMYK

Submit File Without Markings

File Format : PDF, EPS