Spirit Flag

(Medium) 1250x750mm

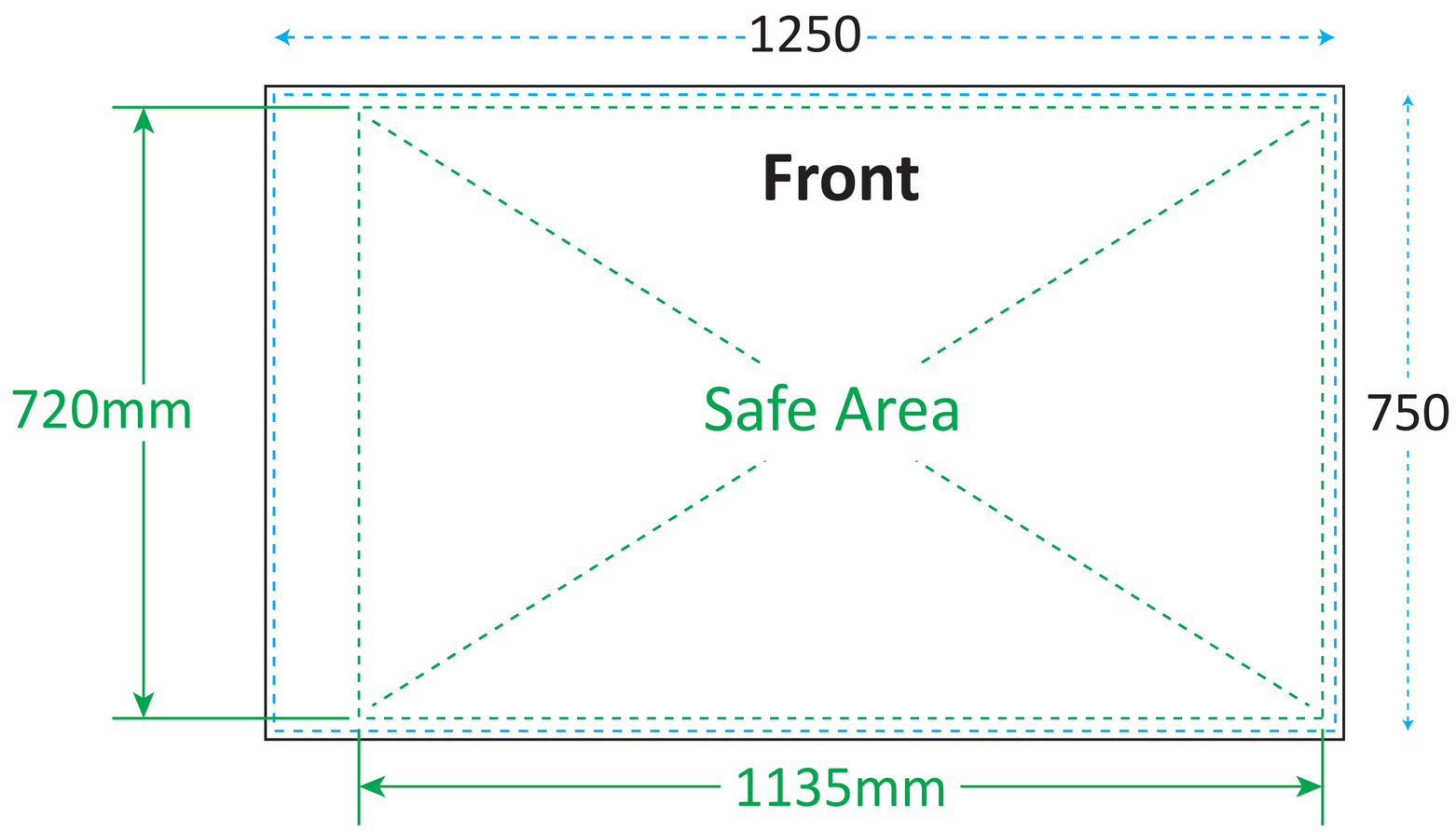

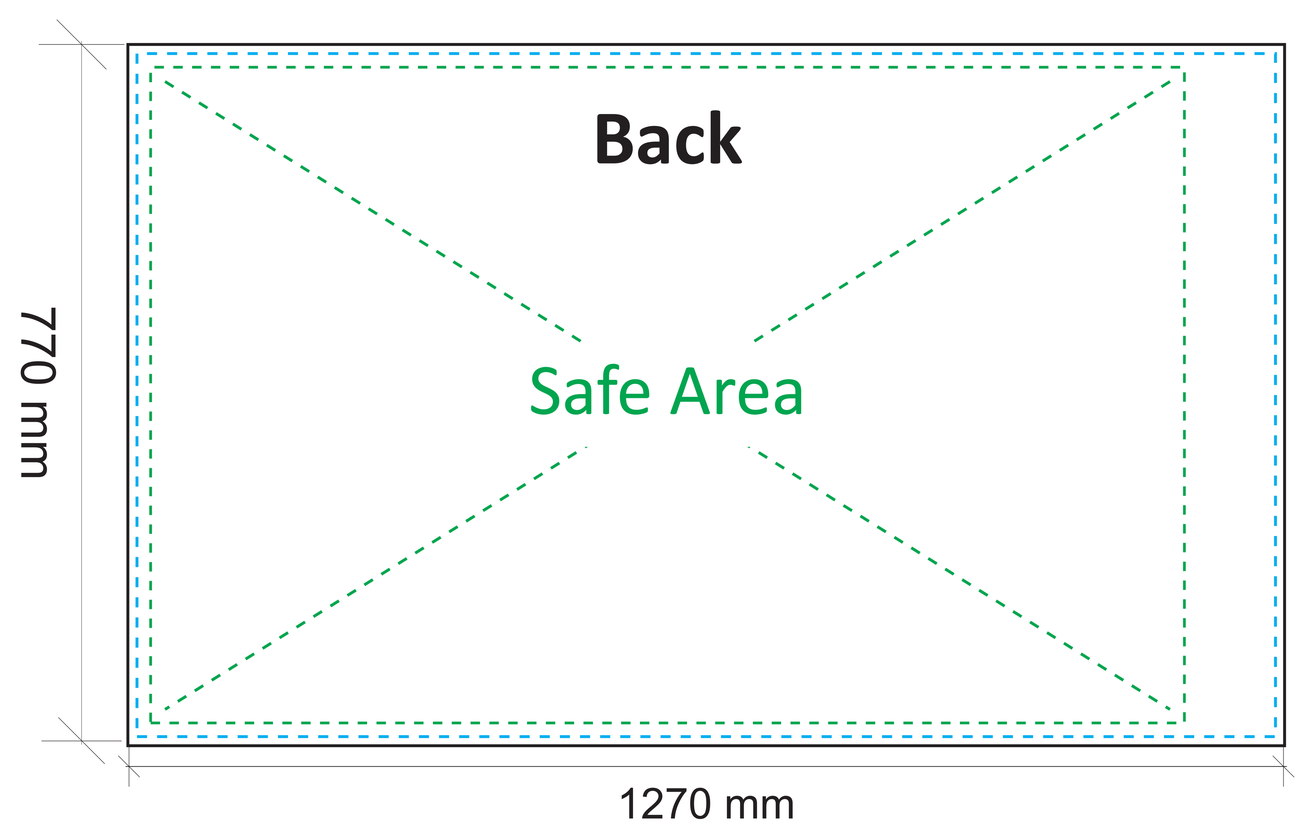

Safe Area

Actual Size

Print Area

Unit : Millimetres (mm)

ARTWORK GUIDELINES

Color Format : CMYK

Submit File Without Markings

File Format : PDF, EPS