S-WF-01

Wheel Of Fortune (Large)

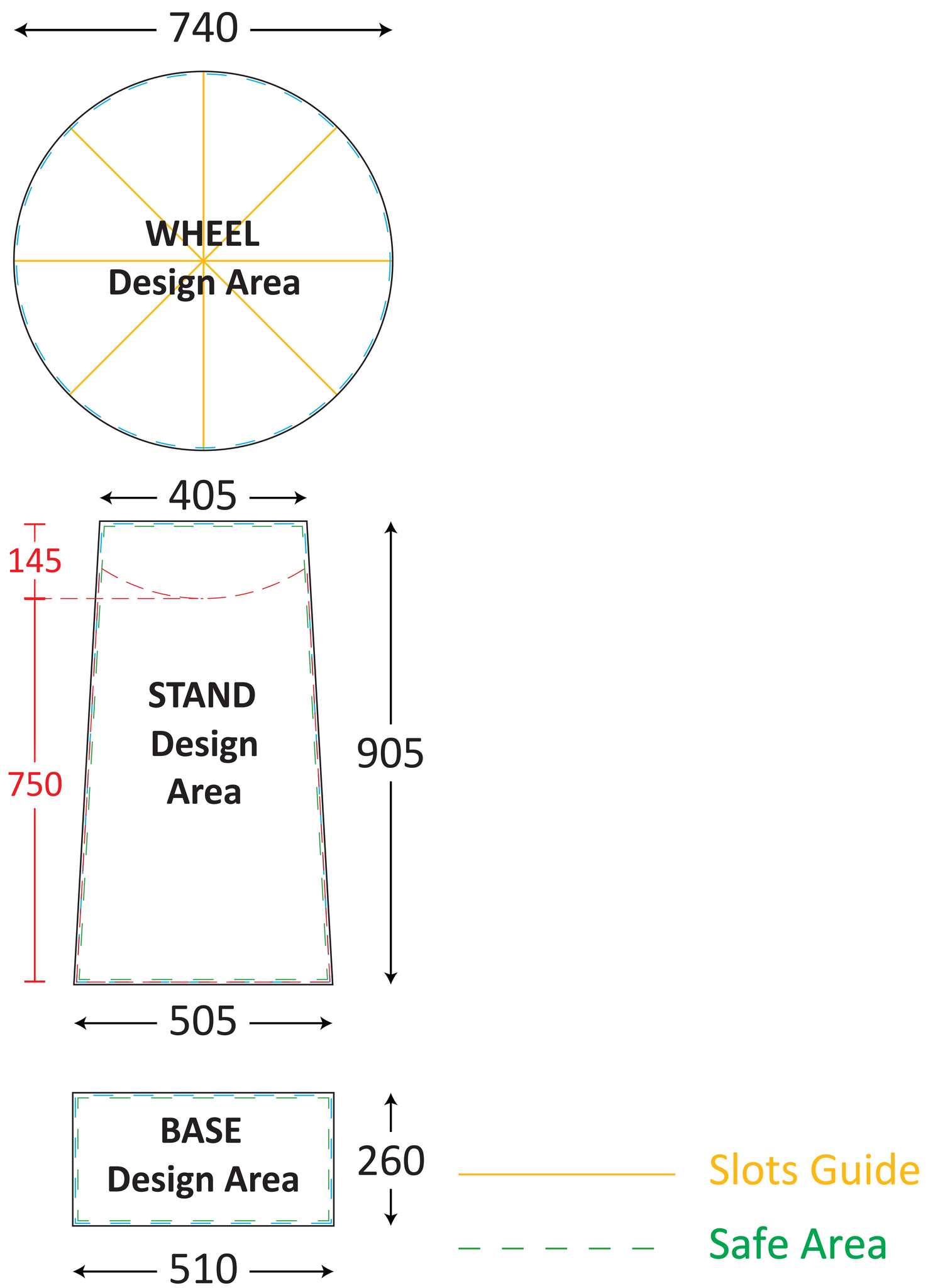

Unit : Millimetres (mm)

ARTWORK GUIDELINES

Color Format : CMYK

Submit File Without Markings

File Format : PDF, EPS